PANTOMOVE

Unique 3D movement provides 360-degree movement for seated students or teachers; height-adjustable; designed for front side and backwards sitting; aluminum base; double-walled polypropylene shell; dual wheel castors lock when no weight is in the chair to prevent empty chairs from moving.

PANTOMOVE PLUS-SOFT

Frame of aluminium foot star and a gas-filled spring; seat shell consisting of a blown plastic core padded all over with a rigid fabric cover; glide elements or castors for hard or soft floors or 2C universal glide elements with optional ergonomic tilt mechanism; Plus model for raised sitting/standing workstations with castors braked under load and with a foot ring that is height-adjustable and lockable in 3cm increments.

HOKKI STOOL

Round-bottom stool allows for intuitive 360-degree movement while seated; thermoplastic curved base provides grip to floor, protects flooring and reduces noise; this simple construction allows students the same intuitive ability to move as is natural when standing; this easy movement builds core strength, increases attention span, and improves retention and efficiency.

SHIFT+ FUSION TABLE

Freeform table with curves that fit each other and all of the other Shift+ product curves; flip top or four legs; locking dual wheel castors; flip action is two-handed for security; top locks when horizontal or flipped for safety; fully-sealed laminated top with multi-density fiberboard core and tightly glued hard plastic edges to protect top from moisture damage; legs are bent powder-coated 12 gauge steel tubes.

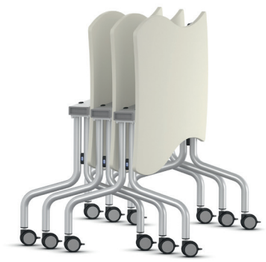

SHIFT+ INTERACT LECTERN

Mobile pneumatic height-adjustable table; laptop storage; curves that fit each other and all of the other Shift+ product curves; fully-sealed laminated top with multi-density fiberboard core and tightly glued edges to protect top from moisture damage; 12 gauge steel column and base; four dual wheel locking castors.

CLUBLOUNGE

Upholstered-element system comprising table and seating elements of stools, easy chairs, sofas, benches, and corner sofas in two different seating heights; individual elements can be combined into entire seating landscapes; elements comprising a floor plate with glide elements.

PUZZLE/TEAM TABLE

Organically shaped table with 12 gauge steel powder coated legs welded to the 12 gauge steel frame for strength and durability; fully-sealed laminated top with multi-density fiberboard core and tightly glued hard plastic edges to protect top from moisture damage; standing or seated heights; locking castors are available.

RONDOLIFT TABLE

Pneumatic height-adjustable table; 12 gauge steel column with four star base; dual wheel lockable castors; fully-sealed laminated top with multi-density fiberboard core and tightly glued hard plastic edges to protect top from moisture damage.

SHIFT+ LANDSCAPE SEATING

Upholstered curved or straight mono block bench; curves that fit each other and all of the other Shift+ product curves; stamskin vinyl upholstery; easy to move; plastic glides.

SHIFT+ TRANSFER CABINETS

Curved or straight book shelf with adjustable shelves; mobile with locking industrial castors; curves that fit each other and all of the other Shift+ product curves; two handles; perforated metal back panel; fully-sealed laminated top with multi-density fiberboard core and tightly glued edges to protect top and shelves from moisture damage; two sided and door options available; opposing magnets on either side to connect firmly when grouped.

SHIFT+ TRANSFER B0X

Mobile unit with rails for bins and locking industrial castors; two handles; perforated metal back panel; fully-sealed laminated top with multi-density fiberboard core and tightly glued edges to protect top and sides from moisture damage; opposing magnets on either side to connect firmly when grouped.

SHIFT+ TRANSFER TEACH

Straight storage with shelves and locking door; dual wheel locking castors; fully-sealed laminated top with multi-density fiberboard core and tightly glued edges to protect top, shelves, door and sides from moisture damage; two handles; perforated metal back panel; opposing magnets on either side; bins additional.

SHIFT+ THUMBPRINT TABLE

Convex and concave organically shaped table with curves that fit each other and all of the other Shift+ product curves; four legs are welded to the frame and tables stack; 2 locking castors, 2 plastic glides; fully-sealed laminated top with multi-density fiberboard core and tightly glued edges to protect top from moisture damage; 12 gauge powder coat steel legs and frame.

PANTOSWING-LUPO CHAIR

Dynamic chair: ergonomic shell rocks while frame remains stationary to allow student movement while seated; contoured double-wall poly shell designed for front, side and backwards sitting; 12 gauge round steel tube with five bends and no screw or rivet punctures for superior strength and durability; 10 square inches of floor contact with floor protecting glides.

704.378.6500
info@vsamerica.com

www.vsamerica.com

Register today at
www.nationalipa.org

FLEXIBLE FURNITURE SOLUTIONS BY VS

Create dynamic learning spaces with ergonomic furniture that is built to last.

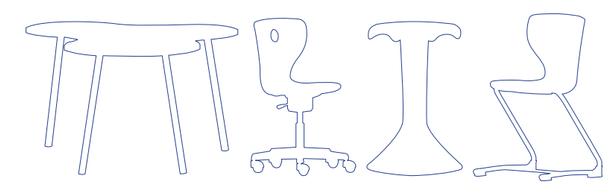

Available on a competitively solicited and publicly awarded cooperative contract (Contract #R142216)

DID YOU KNOW?

ON AVERAGE, STUDENTS AGED...

6-10 CAN'T SIT STILL MORE THAN **5** MINUTES

11-15 CAN'T SIT STILL MORE THAN **15** MINUTES

15-20 CAN'T SIT STILL MORE THAN **25** MINUTES

MOVEMENT IS KEY FOR LEARNING

Studies show that spontaneous movement is the only way children develop fully. Students need furniture they're free to move in – even small movements, such as fidgeting, improve test scores. VS products inspire motion, helping create stimulating learning spaces where movement is integrated into instruction to maintain attention and concentration.

ERGONOMIC FURNITURE

It's crucial that each and every student has a chair and table which suits their individual height. With ergonomic furniture, students can sit dynamically and experience physical, mental, and developmental benefits. Physical well-being and flexibility help create ideal conditions for authentic learning, both individually and collaboratively.

VS offers chairs and tables in varying sizes, or that are easily adjusted to the appropriate height, so every student has their perfect fit.

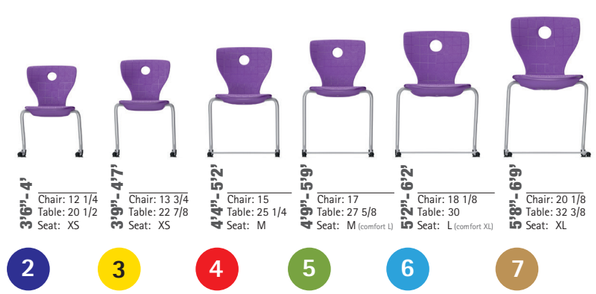

FLEXIBLE & DYNAMIC SPACES

VS' ergonomic furniture inspires motion, and has the flexibility to adapt to every changing need – giving educators the freedom to easily create spaces for every type of learning style. It's important to all of us at VS that we not only design furniture to enhance today's learning environment, but that our furniture solutions also have the utmost adaptability for where learning spaces are going in the future.

DURABLE FURNITURE THAT LASTS

VS furniture combines a uniquely distinctive design with resilience and durability. Our furniture undergoes extensive testing, ensuring the utmost quality and durability. We go to unusual lengths to design safe furniture that weathers rambunctious students and the test of time.

Welded frames provide superior table strength and longevity.

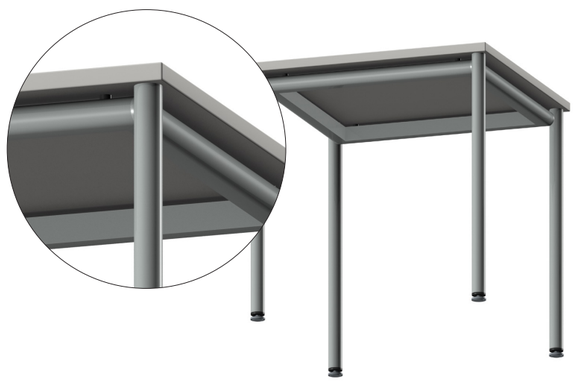

Material and load tests are carried out in our own testing labs to ensure the utmost quality and durability. Products are also tested by external test institutes.

FREDERICK COUNTY MIDDLE SCHOOL | WINCHESTER, VA

DISCOVERY ELEMENTARY SCHOOL | ARLINGTON, VA

DISCOVERY STEM ACADEMY | NEWPORT NEWS, VA

GEMS WORLD ACADEMY | CHICAGO, IL

BUCKINGHAM BROWNE AND NICHOLS SCHOOL | CAMBRIDGE, MA